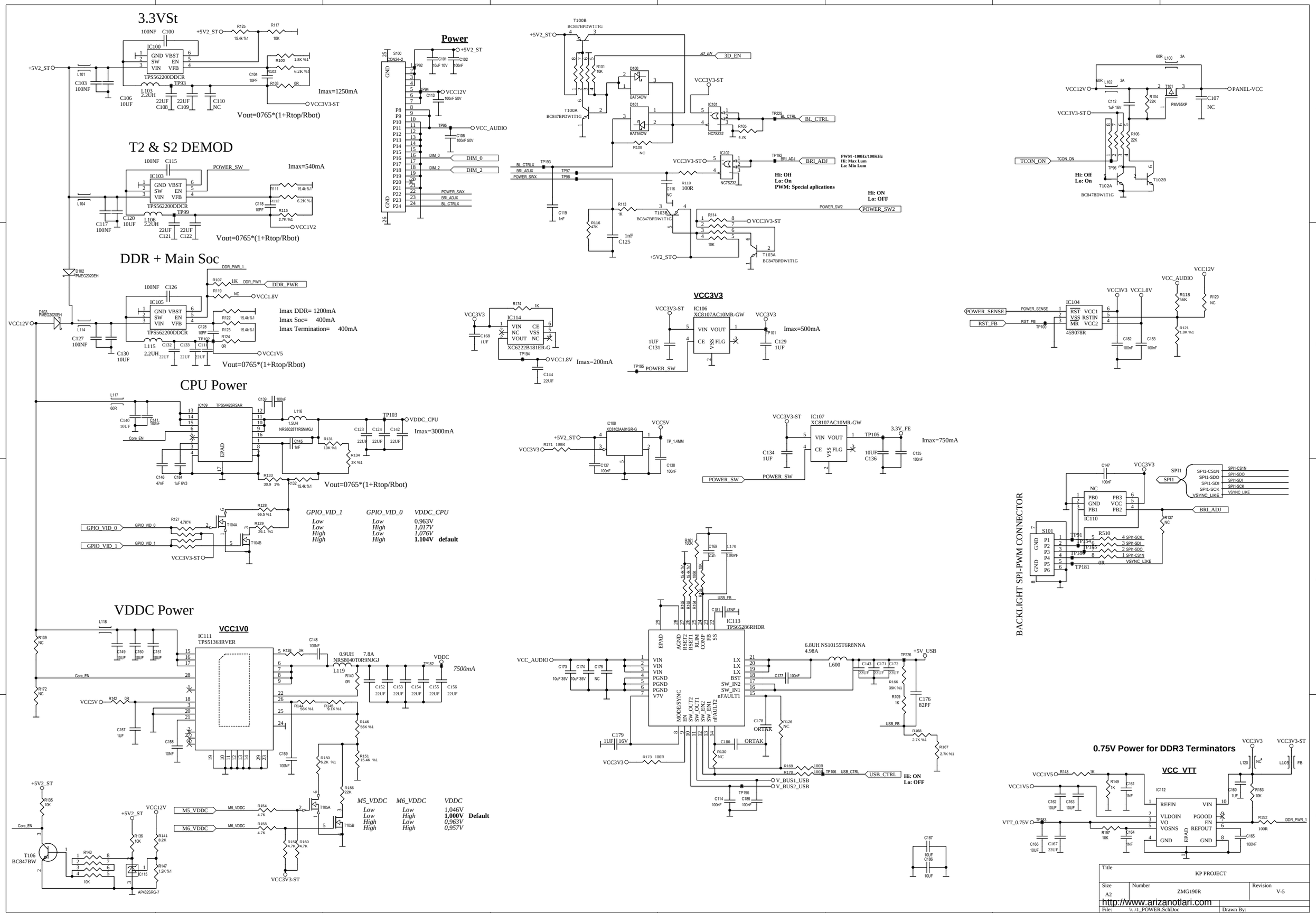
3.3VSt
Imax=1250mA
Vout=0765*(1+Rtop/Rbot)
T2 & S2 DEMOD
Imax=540mA
Vout=0765*(1+Rtop/Rbot)
DDR + Main Soc
Imax DDR= 1200mA
Imax Soc= 400mA
Imax Termination= 400mA
Vout=0765*(1+Rtop/Rbot)
CPU Power
Imax=3000mA
Vout=0765*(1+Rtop/Rbot)
GPIO_VID_1 GPIO_VID_0 VDDC_CPU
Low Low 0.963V
Low High 1,017V
High Low 1,076V
High High 1.104V default
VDDC Power
M5_VDDC M6_VDDC VDDC
Low Low 1,046V
Low High 1,000V Default
High Low 0,963V
High High 0,957V
Power
VCC3V3
Imax=500mA
Imax=200mA
Imax=750mA
BACKLIGHT SPI-PWM CONNECTOR
0.75V Power for DDR3 Terminators
VCC_VTT
Title KP PROJECT
Size A2
Number ZMG190R
Revision V-5
http://www.arizanotlari.com
File: \\..\1_POWER.SchDoc
Drawn By:

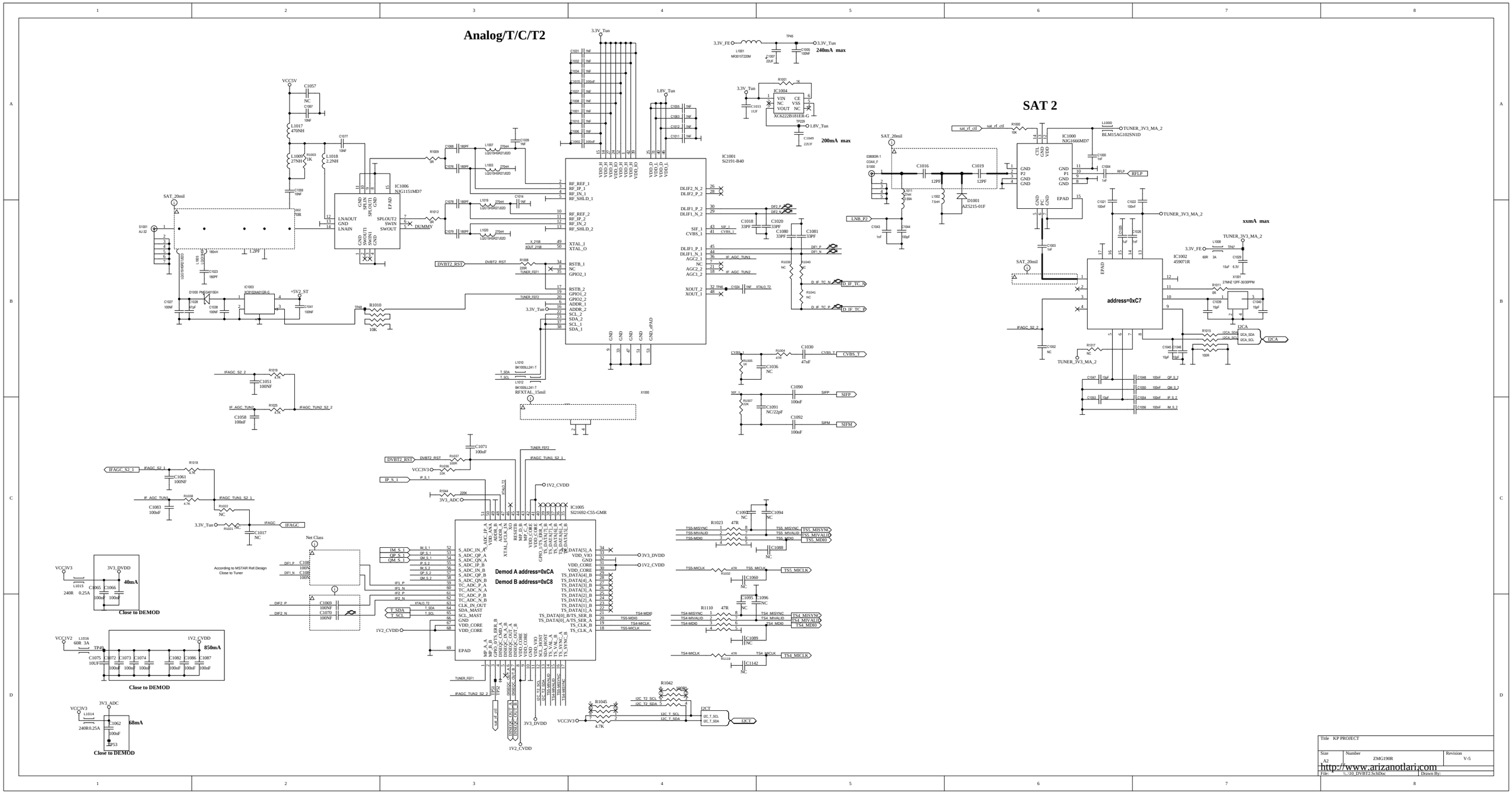
Analog/T/C/T2
SAT 2
IC1001
SZ191-B40
IC1006
N3G1151MD7
IC1004
XC6222B181ER-G
IC1000
N3G1666MD7
IC1002
459071R
IC1003
XC6102A01QR-G
IC1005
SZ1692-C55-GMR
address=0xC7
Demod A address=0xCA
Demod B address=0xC8
240mA max
200mA max
xxmA max
40mA
850mA
68mA
Close to DEMOD
According to MSTAR Ref.Design
Close to Tuner
RFXTAL_15mail
Net Class
Title KP PROJECT
Size A2
Number ZMG190R
Revision V-5
File: %_U0_DVBT2.SchDoc
Drawn By:
http://www.arizanotlari.com

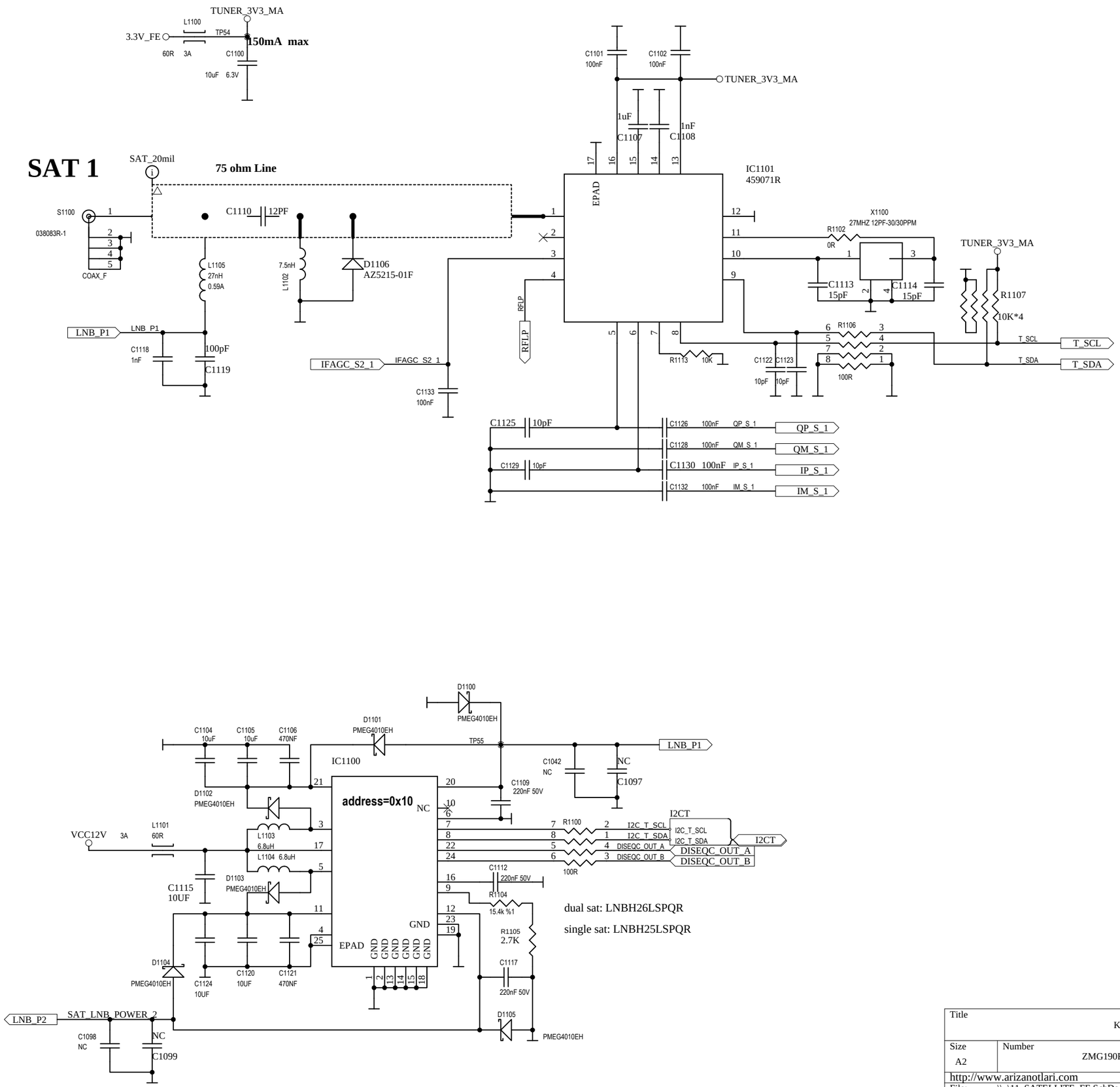

Title		
KP PROJECT		
Size: A2	Number: ZMG190R	Revision: V-5
http://www.arizanotlari.com		
File: \\..\11_SATELLITE_FE.SchDoc	Drawn By:	

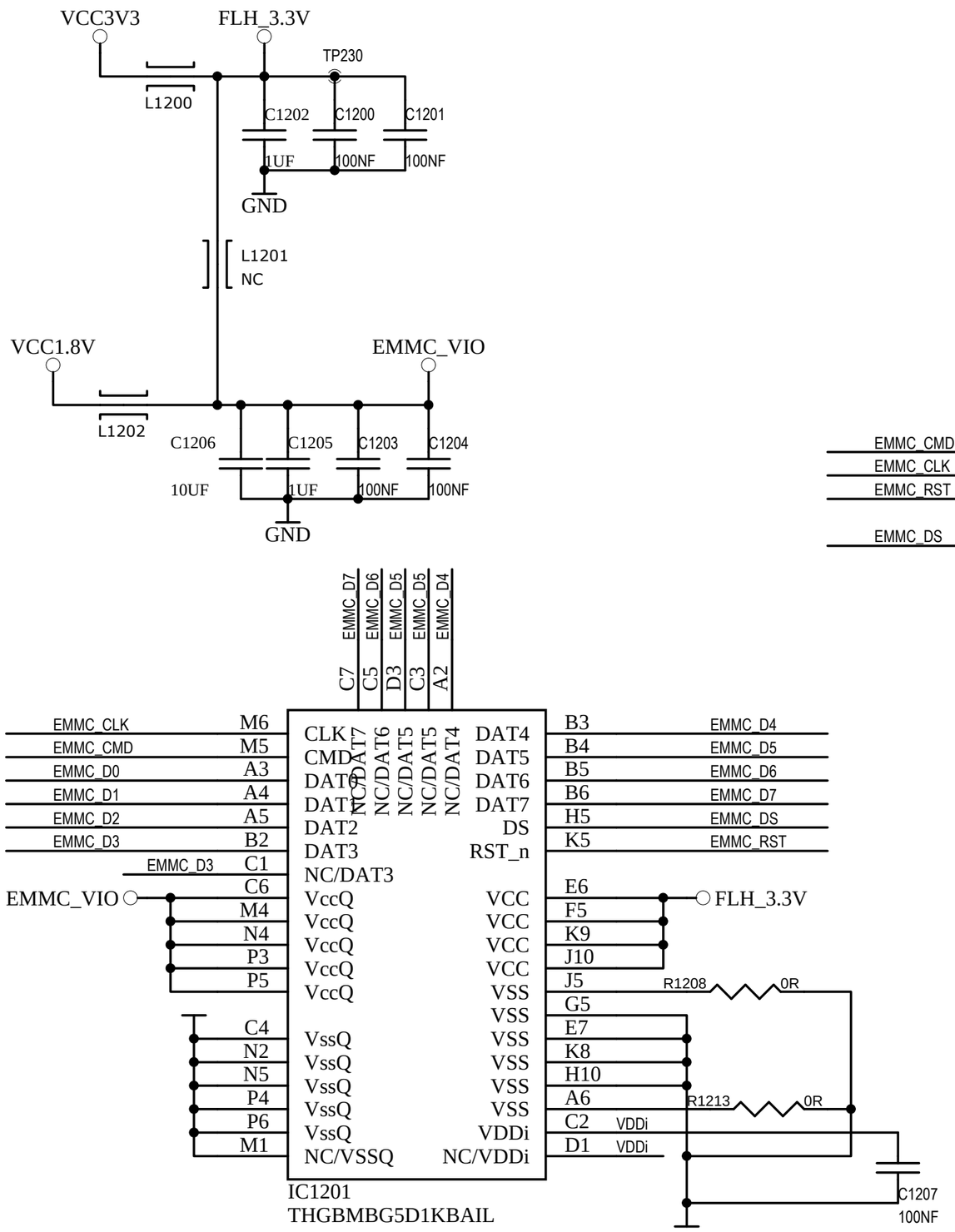

Title		
KP PROJECT		
Size A3	Number ZMG190R	Revision V-5
http:%%www'arizanotlari'com		
File: \\..\12_NANDFLASH.SchDoc		Drawn By:

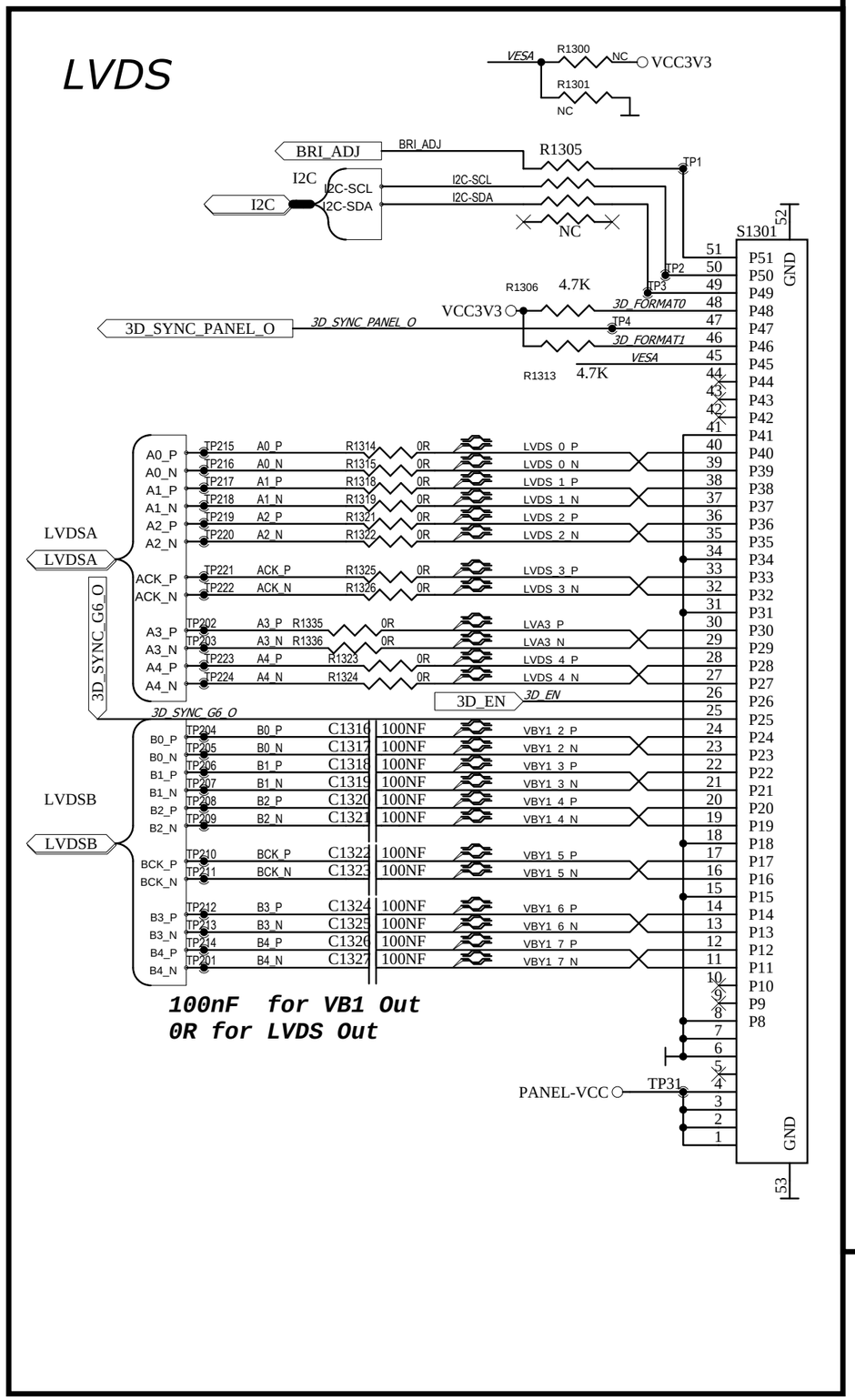

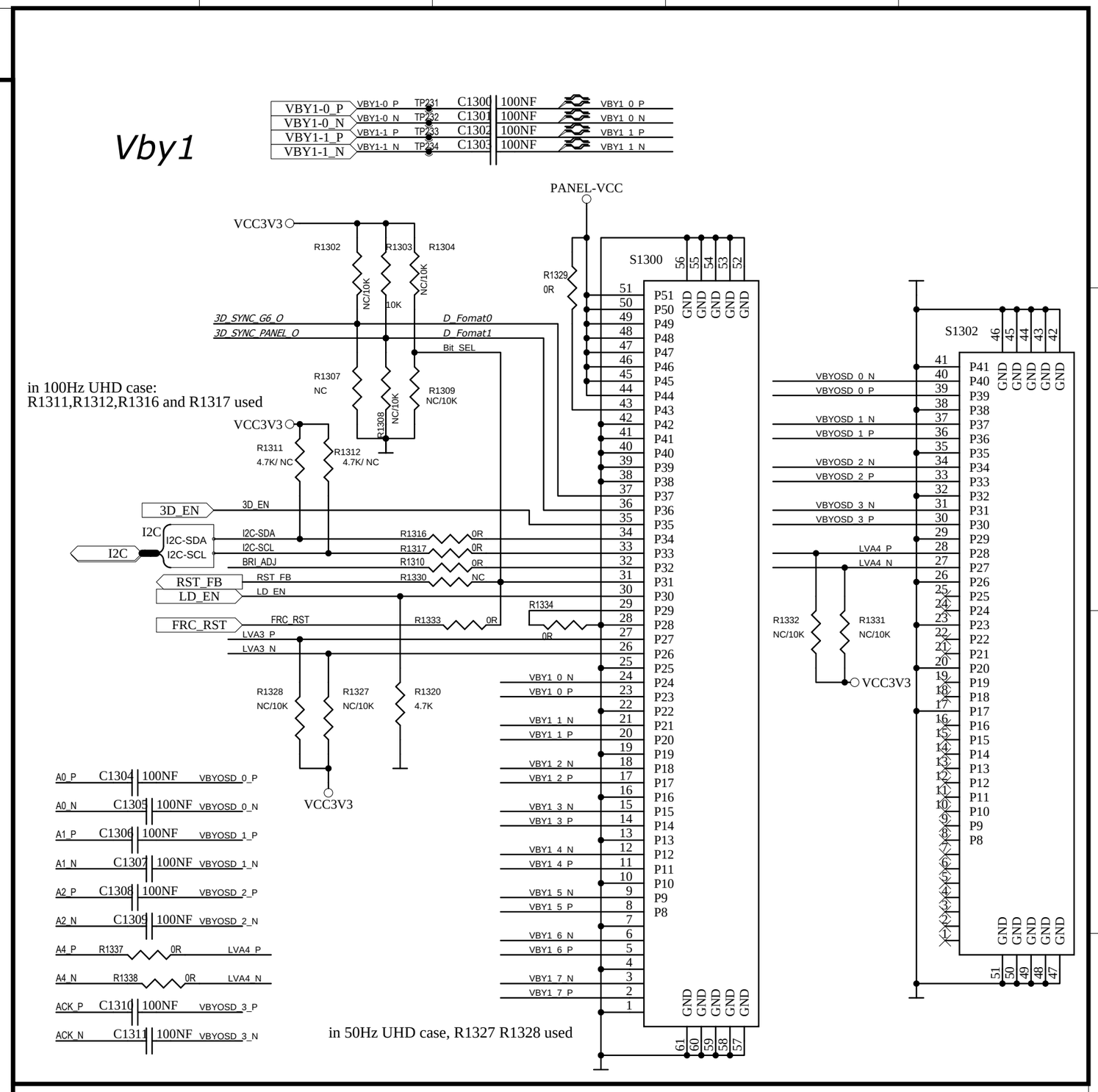

Title	KP PROJECT	
Size A3	Number ZMG190R	Revision V-5
http://www.arizanotlari.com		
File: \\..\13_PANEL INTERFACE.SchDoc		Drawn By:

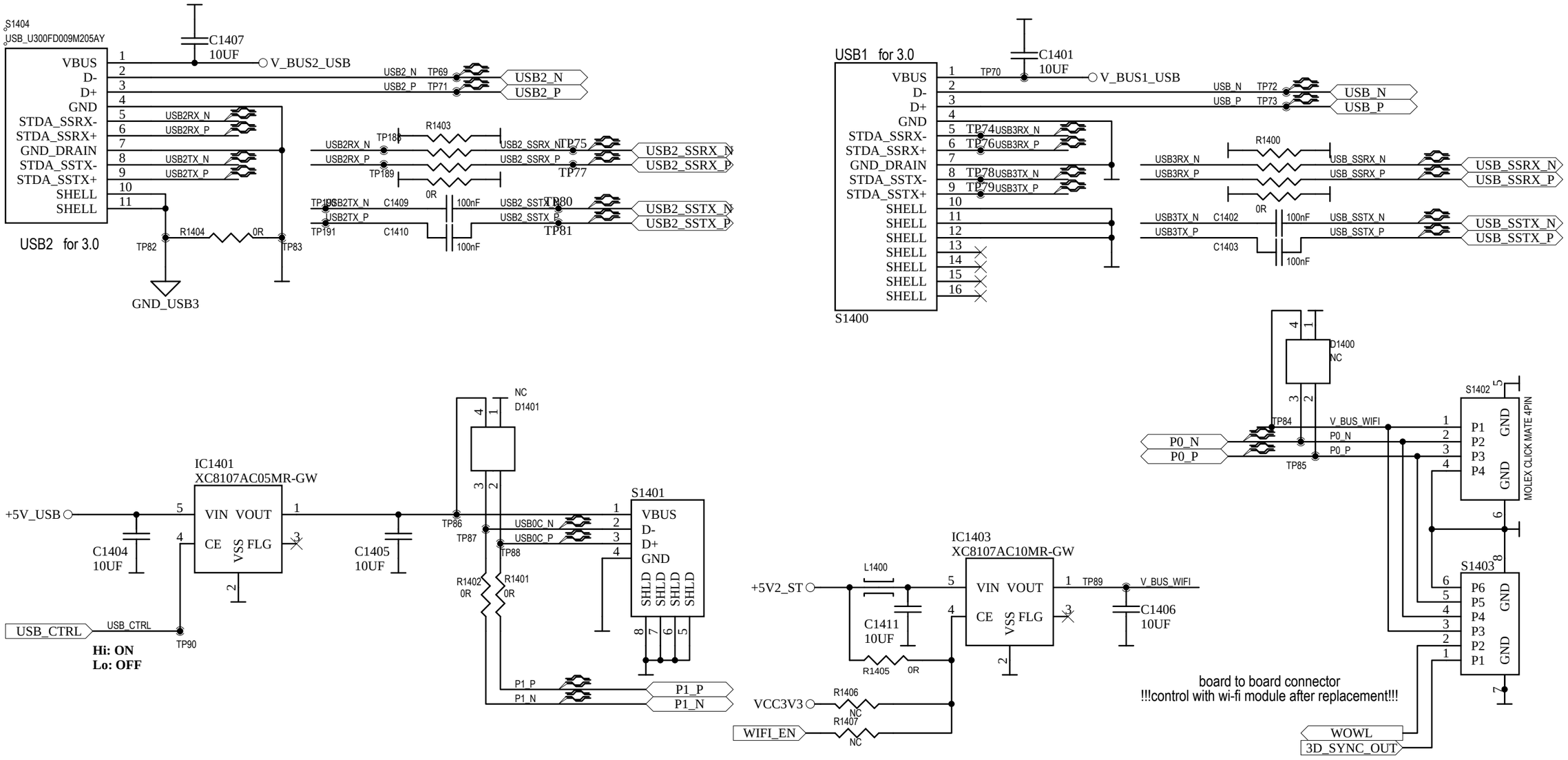

Title		
KP PROJECT		
Size: A3	Number: ZMG190R	Revision: V-5
http://www.arizanotlari.com		
File: \\..\14_USB.SchDoc		Drawn By:

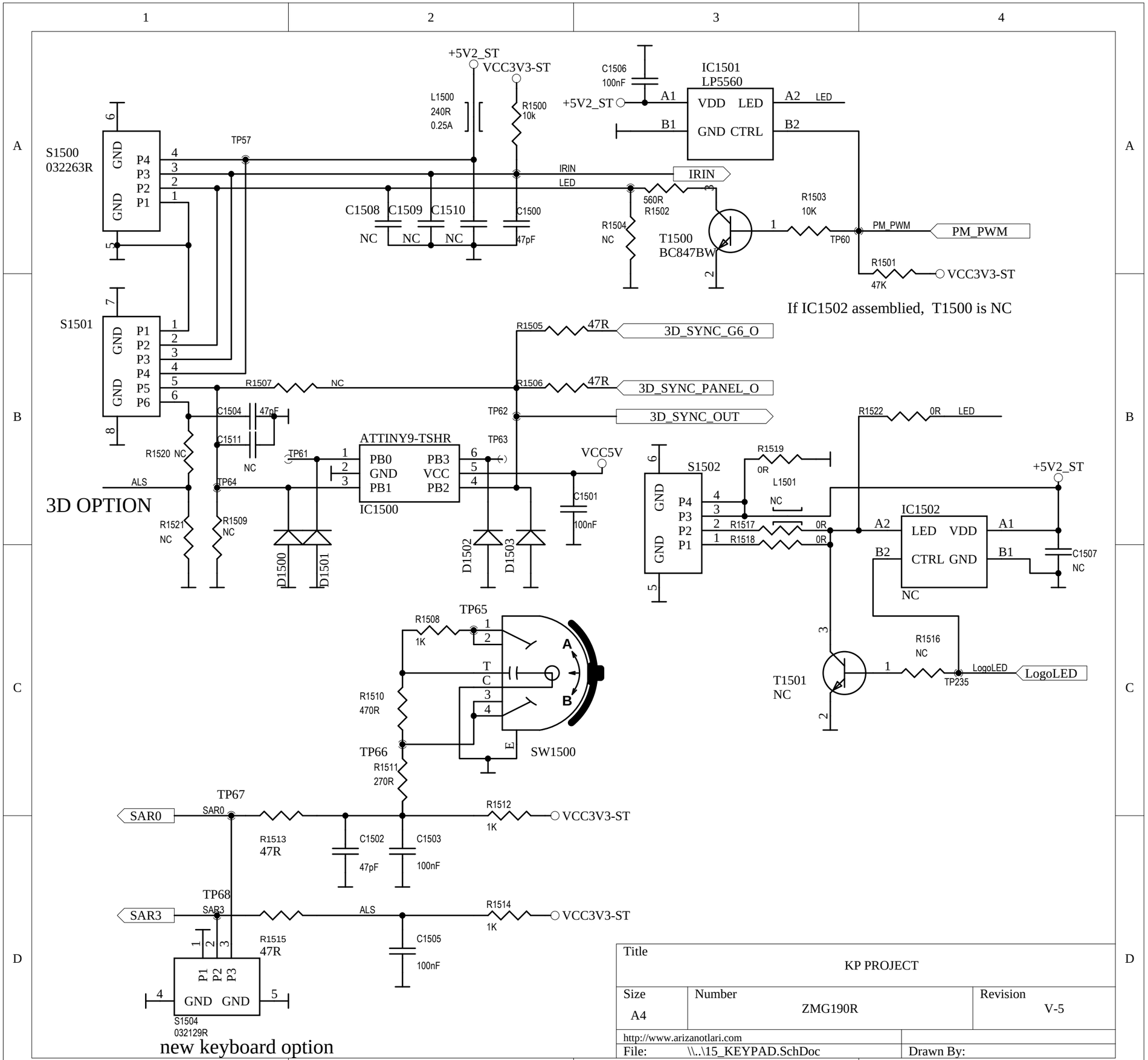

Title		
KP PROJECT		
Size: A4	Number: ZMG190R	Revision: V-5
http://www.arizanotlari.com		
File: \\..\15_KEYPAD.SchDoc		Drawn By:

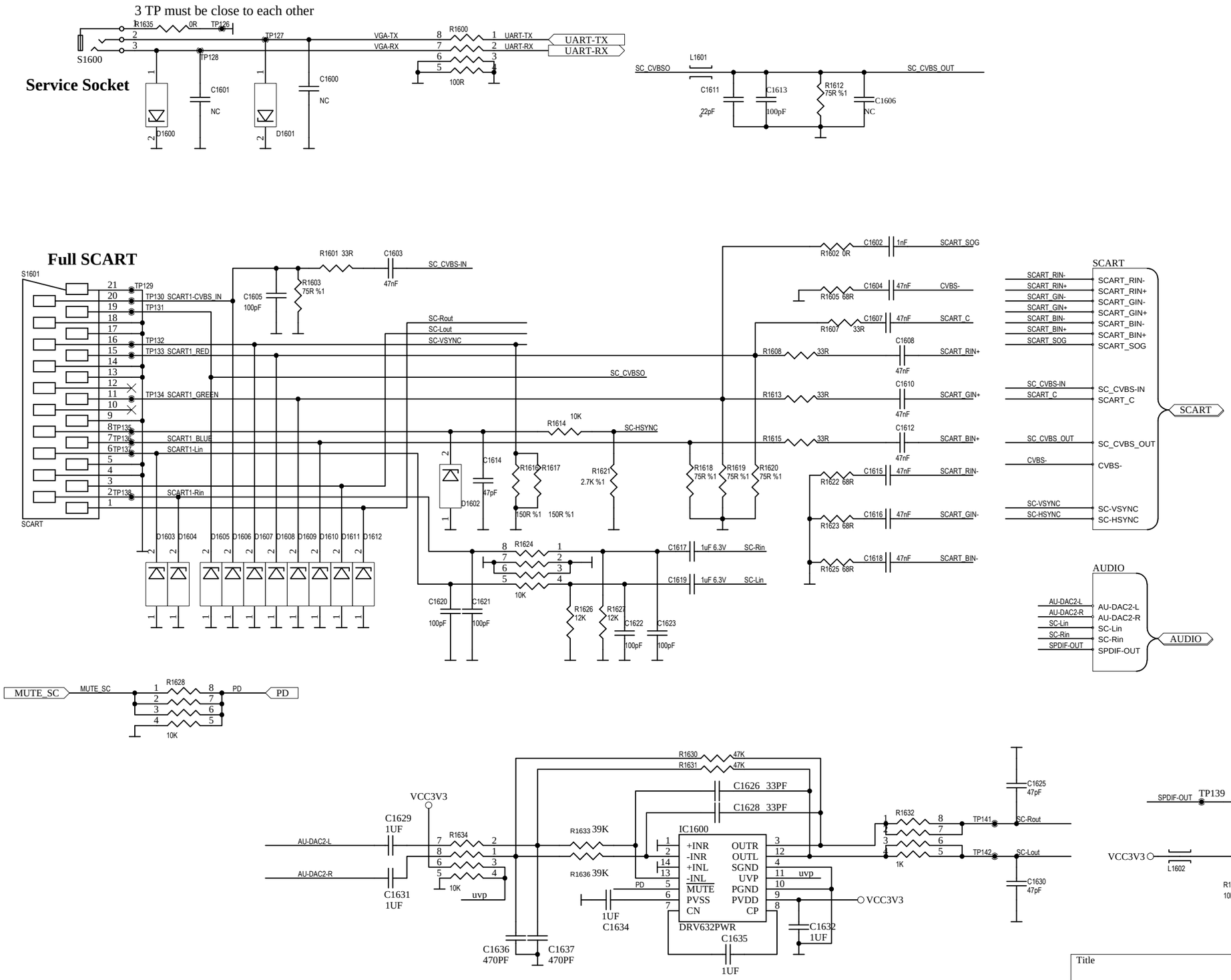

Title		
KP PROJECT		
Size A2	Number ZMG190R	Revision V-5
http://www.arizanotlari.com		
File: \\..\16_AV.SchDoc		Drawn By:

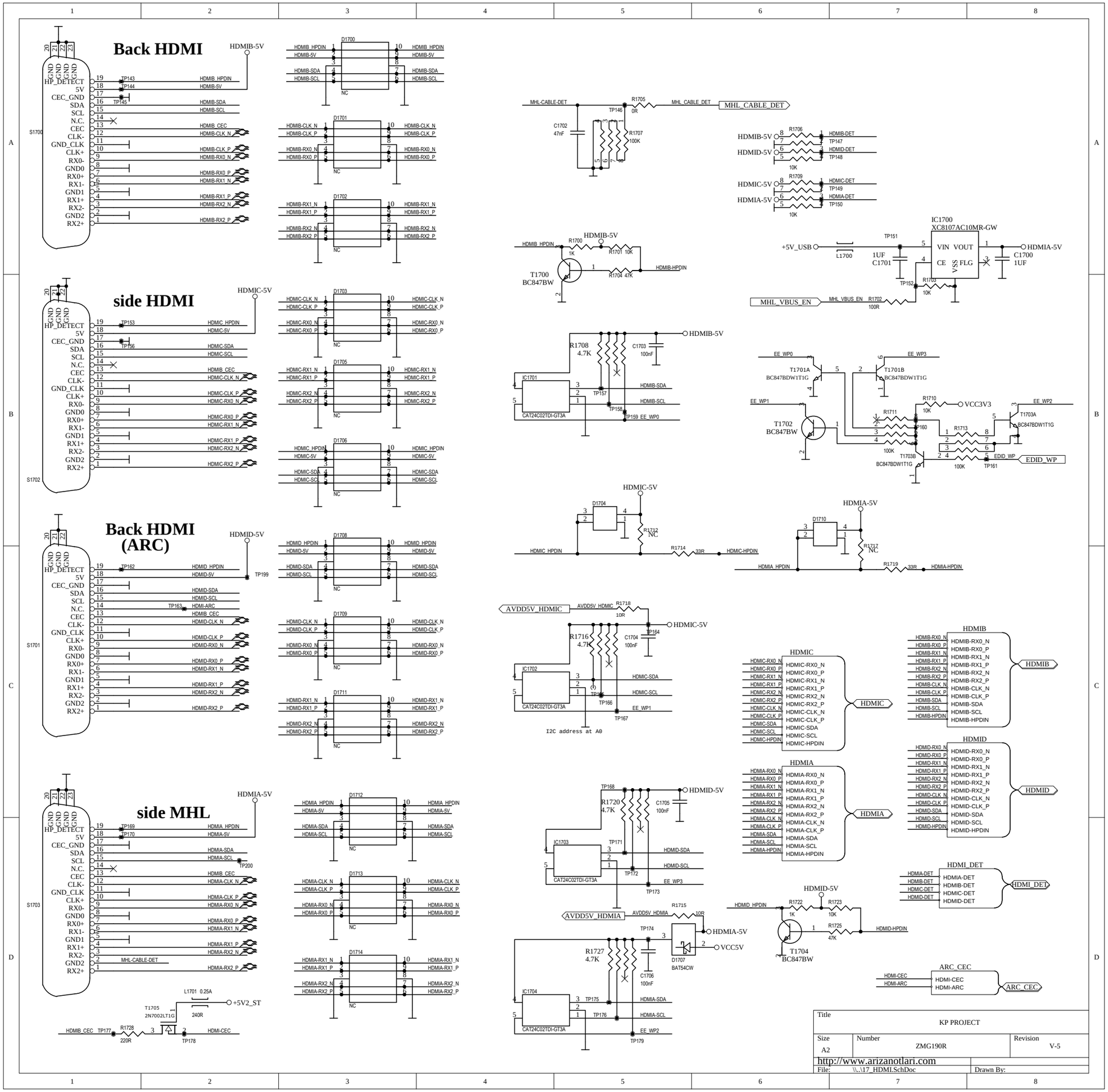
Back HDMI
side HDMI
Back HDMI (ARC)
side MHL
S1700
S1702
S1701
S1703
HP_DETECT
CEC_GND
GND_CLK
HDMIB-5V
HDMIC-5V
HDMID-5V
HDMIA-5V
D1700
D1701
D1702
D1703
D1705
D1706
D1708
D1709
D1711
D1712
D1713
D1714
NC
MHL-CABLE-DET
R1705
MHL_CABLE_DET
C1702
47nF
R1707
100K
R1706
R1709
10K
IC1700
XC8107AC10MR-GW
VIN VOUT
CE FLG
VSS
+5V_USB
L1700
1UF
C1701
C1700
1UF
MHL_VBUS_EN
R1702
100R
R1703
10K
T1700
BC847BW
R1700
1K
R1701 10K
R1704 47K
HDMIB-HPDIN
IC1701
CAT24C02TDI-GT3A
R1708
4.7K
C1703
100nF
HDMIB-SDA
HDMIB-SCL
EE_WP0
EE_WP1
EE_WP2
EE_WP3
T1701A
BC847BDW1T1G
T1701B
BC847BDW1T1G
T1702
BC847BW
R1710
10K
VCC3V3
R1711
100K
T1703A
BC847BDW1T1G
T1703B
BC847BDW1T1G
R1713
100K
EDID_WP
TP161
D1704
R1712
NC
HDMIC_HPDIN
R1714
33R
HDMIC-HPDIN
D1710
R1717
NC
HDMIA_HPDIN
R1719
33R
HDMIA-HPDIN
AVDD5V_HDMIC
R1718
10R
IC1702
R1716
4.7K
C1704
100nF
HDMIC-SDA
HDMIC-SCL
EE_WP1
I2C address at A0
HDMIB
HDMIC
HDMID
HDMIA
HDMI_DET
ARC_CEC
TP168
R1720
4.7K
C1705
100nF
IC1703
HDMID-SDA
HDMID-SCL
EE_WP3
AVDD5V_HDMIA
R1715
10R
D1707
BAT54CW
C1706
100nF
IC1704
HDMIA-SDA
HDMIA-SCL
EE_WP2
R1722
1K
R1723
10K
R1725
47K
T1704
BC847BW
HDMID_HPDIN
HDMID-HPDIN
L1701 0.25A
+5V2_ST
T1705
2N7002LT1G
240R
HDMIB_CEC
R1728
220R
HDMI-CEC
Title
KP PROJECT
Size
A2
Number
ZMG190R
Revision
V-5
http://www.arizanotlari.com
File: \\..\17_HDMI.SchDoc
Drawn By:

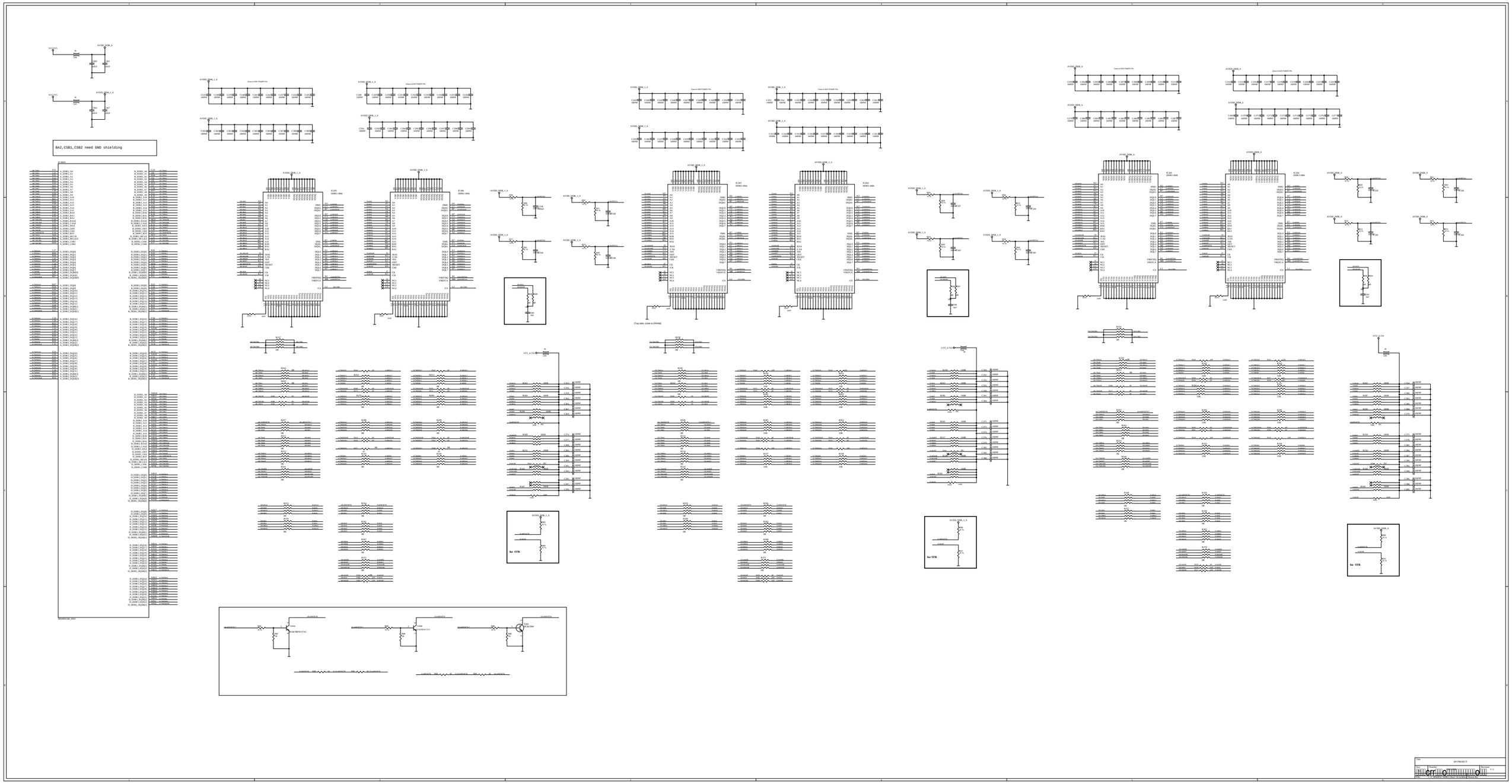
BA2,CSB1,CSB2 need GND shielding
Title
SP PROJECT
Size
Document Number
Rev
V.1
Date:
Sheet of

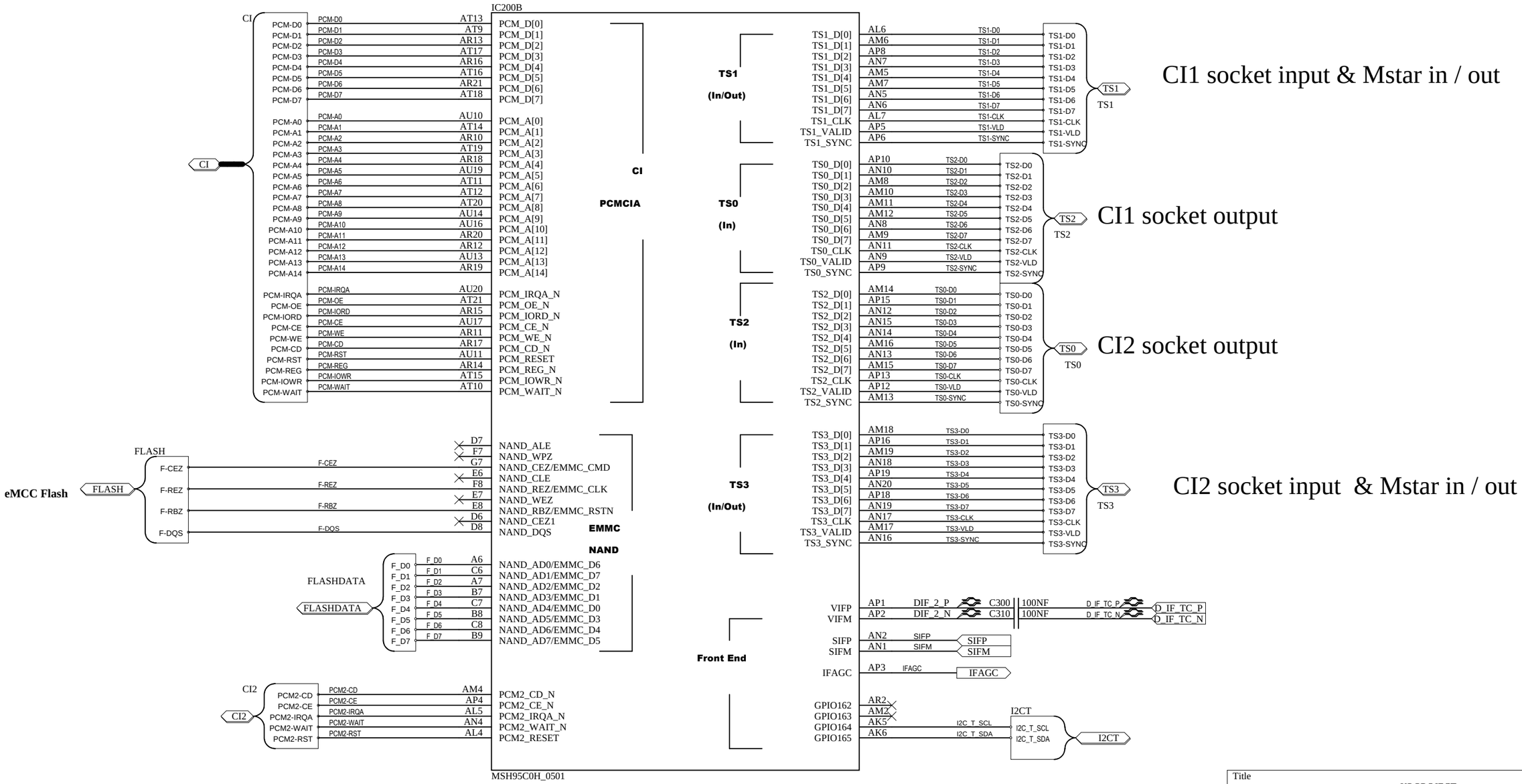

Title	KP PROJECT	
Size A3	Number ZMG190R	Revision V-5
File: \\..\3_MSD95C0H (Front End_.SchDoc		Drawn By:

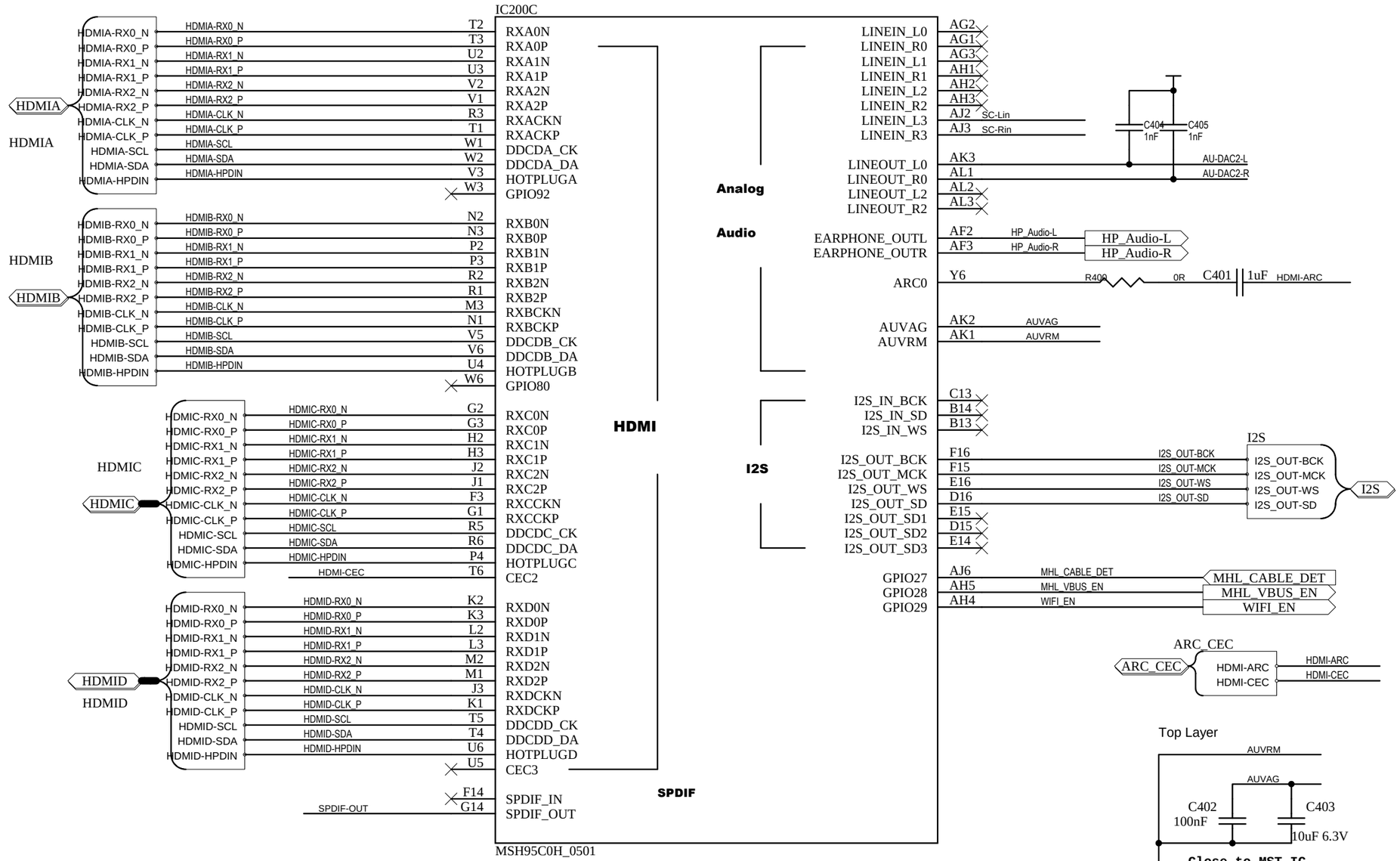

Title		
KP PROJECT		
Size: A2	Number: ZMG190R	Revision: V-5
File: \\..\4_MSD95C0H (HDMI_Audio.SchDoc	Drawn By:	

R513 : 1 X T/T2/C/S/S2 and 1 X T/T2/C

R514 : 2 X T/T2/C/S/S2

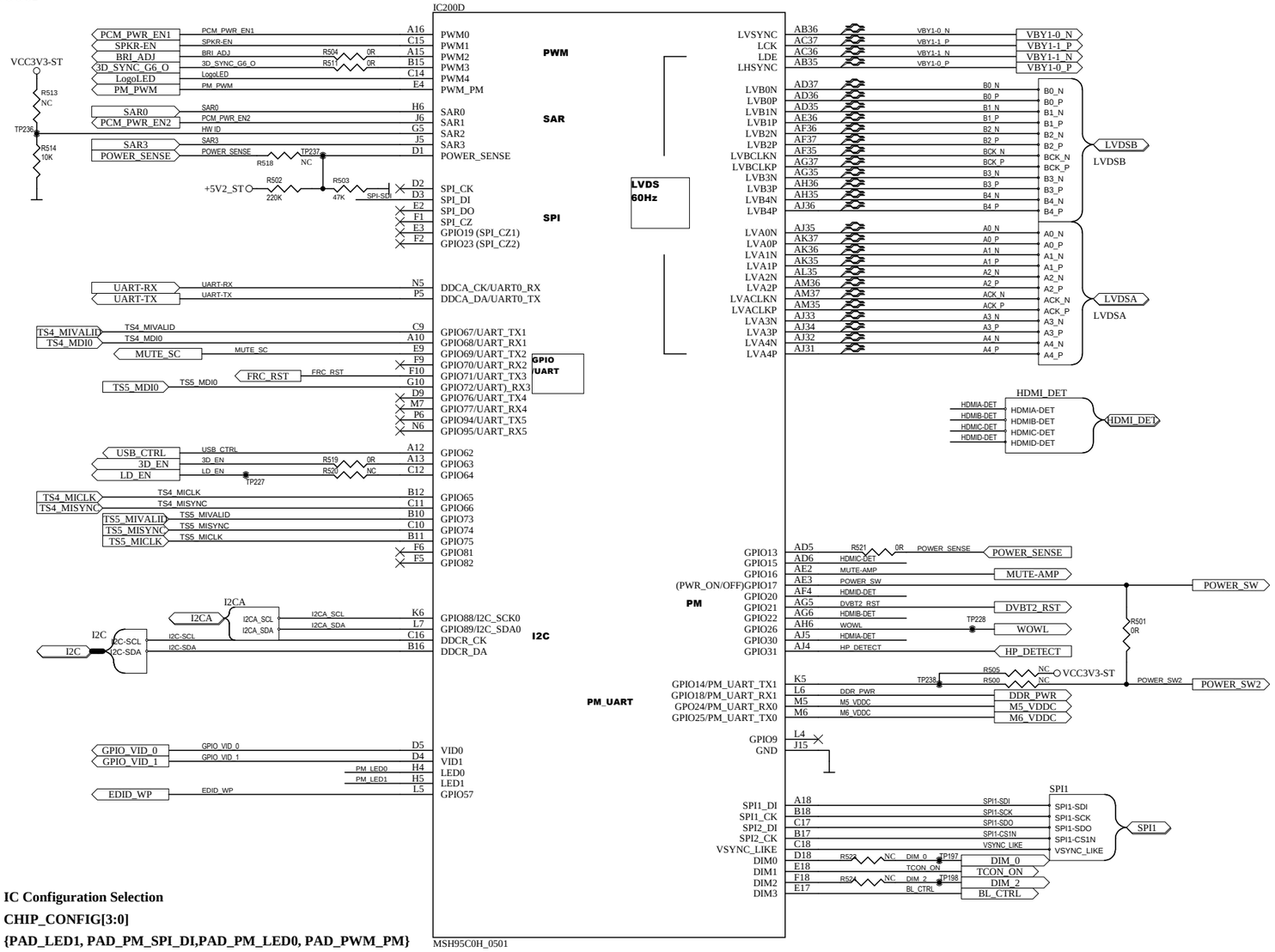

IC Configuration Selection

CHIP_CONFIG[3:0]

{PAD_LED1, PAD_PM_SPI_DI,PAD_PM_LED0, PAD_PWM_PM}

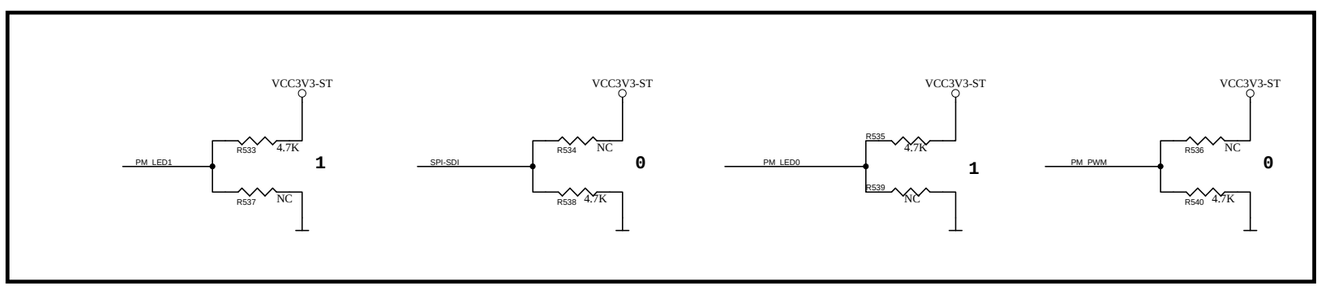

Title	KP PROJECT	
Size A1	Number ZMG190R	Revision V-5
File: \\..\5_MSD95C0H (LVDS_GPIO).SchDoc	Drawn By:	

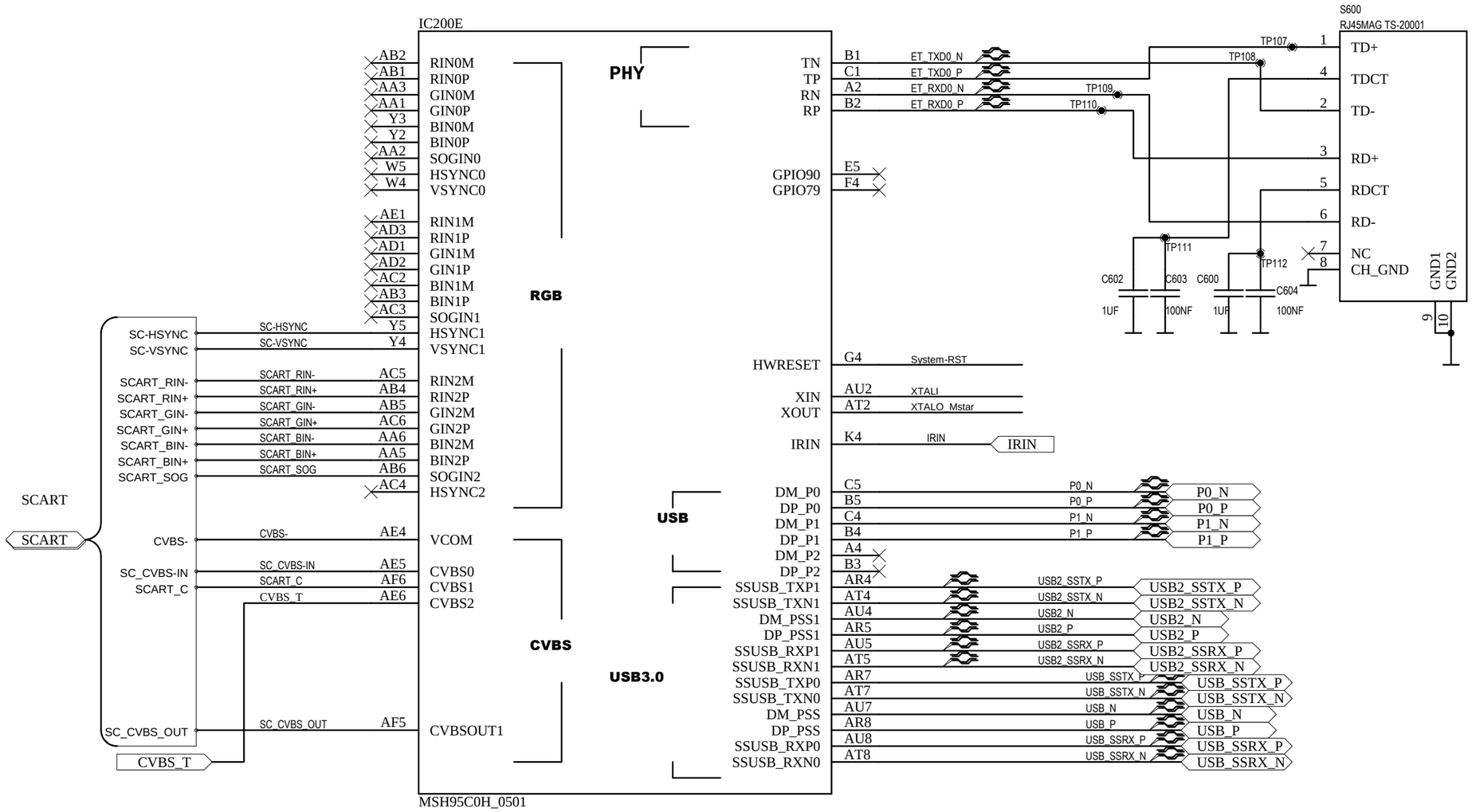

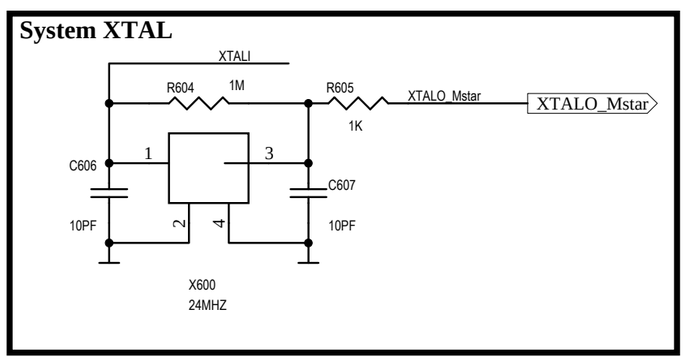

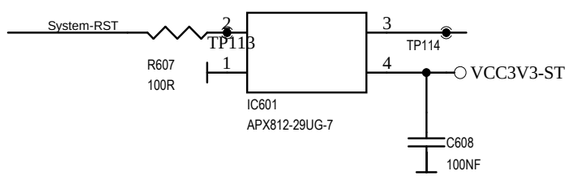

Title		
KP PROJECT		
Size A0	Number ZMG190R	Revision V-5
File: \\..\6_MSD95C0H (RGB_CVBS_U.SchDoc	Drawn By:	

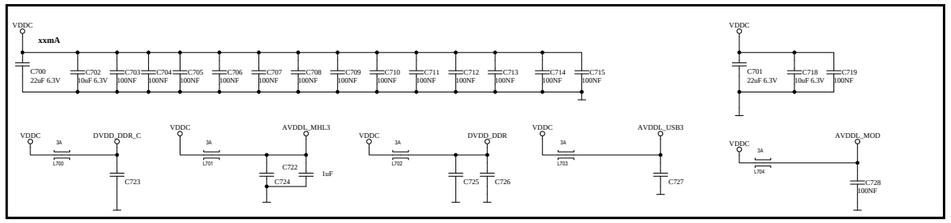

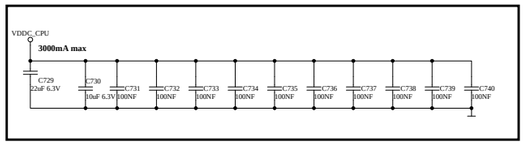

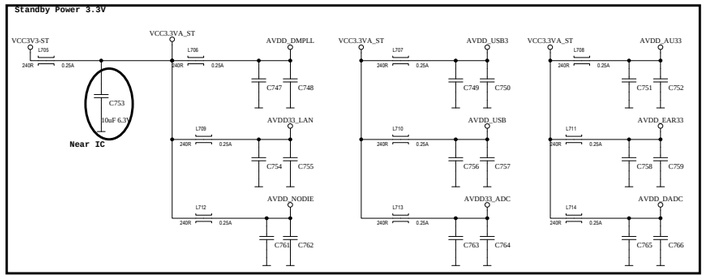

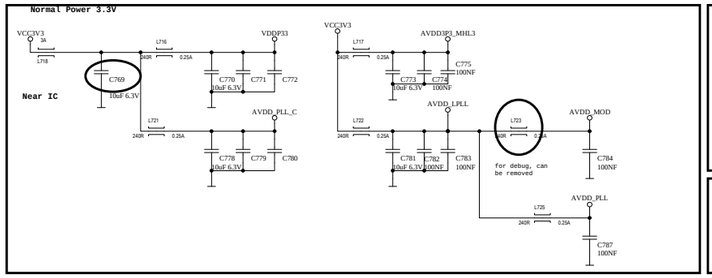

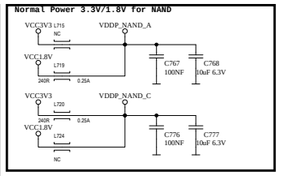

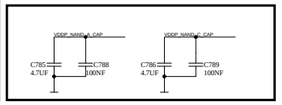

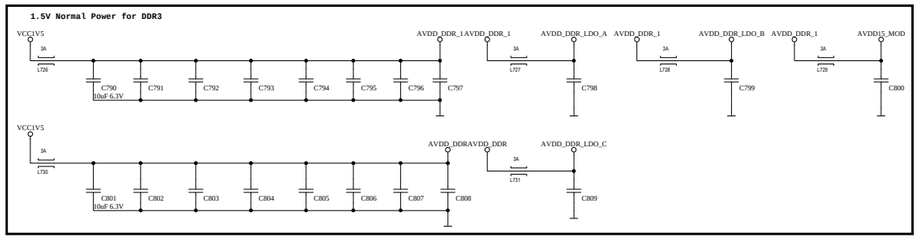

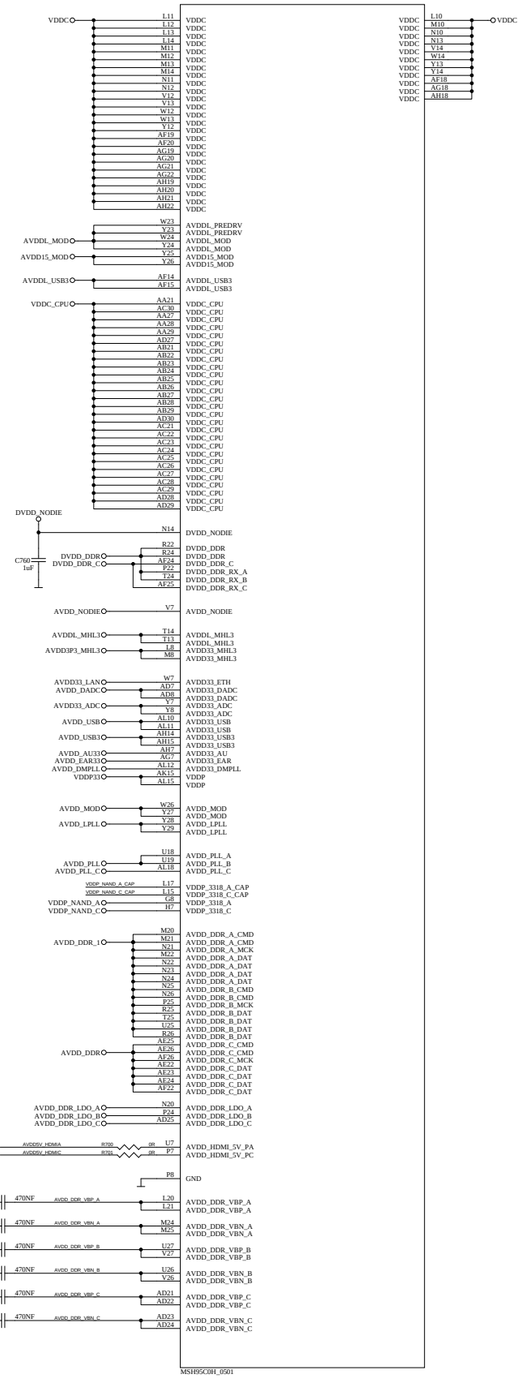

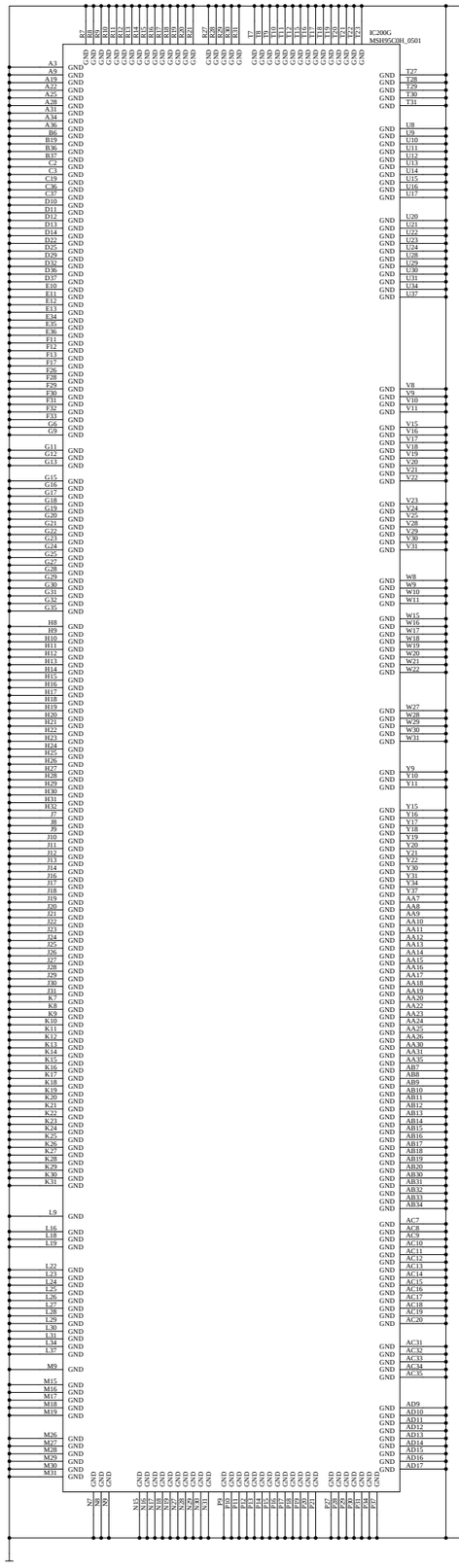

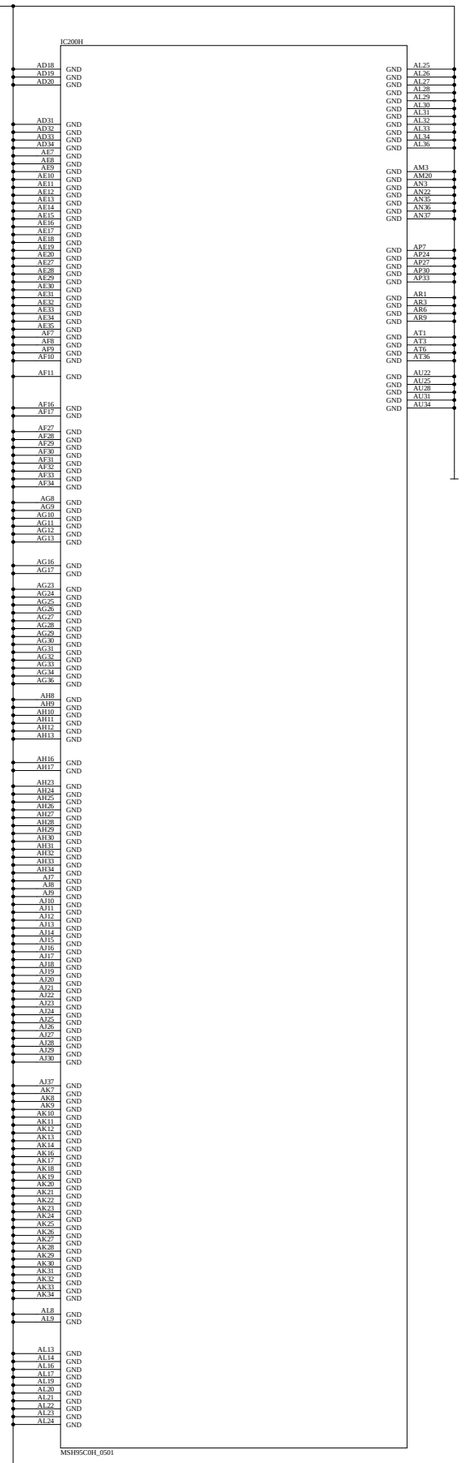

Title	KP PROJECT		
Size	Number		Revision
A4	ZMG190R		V-5
File:	\\.\?_MSD95C0H Power.SchDoc	Drawn By:	

http://www.arizanotlari.com

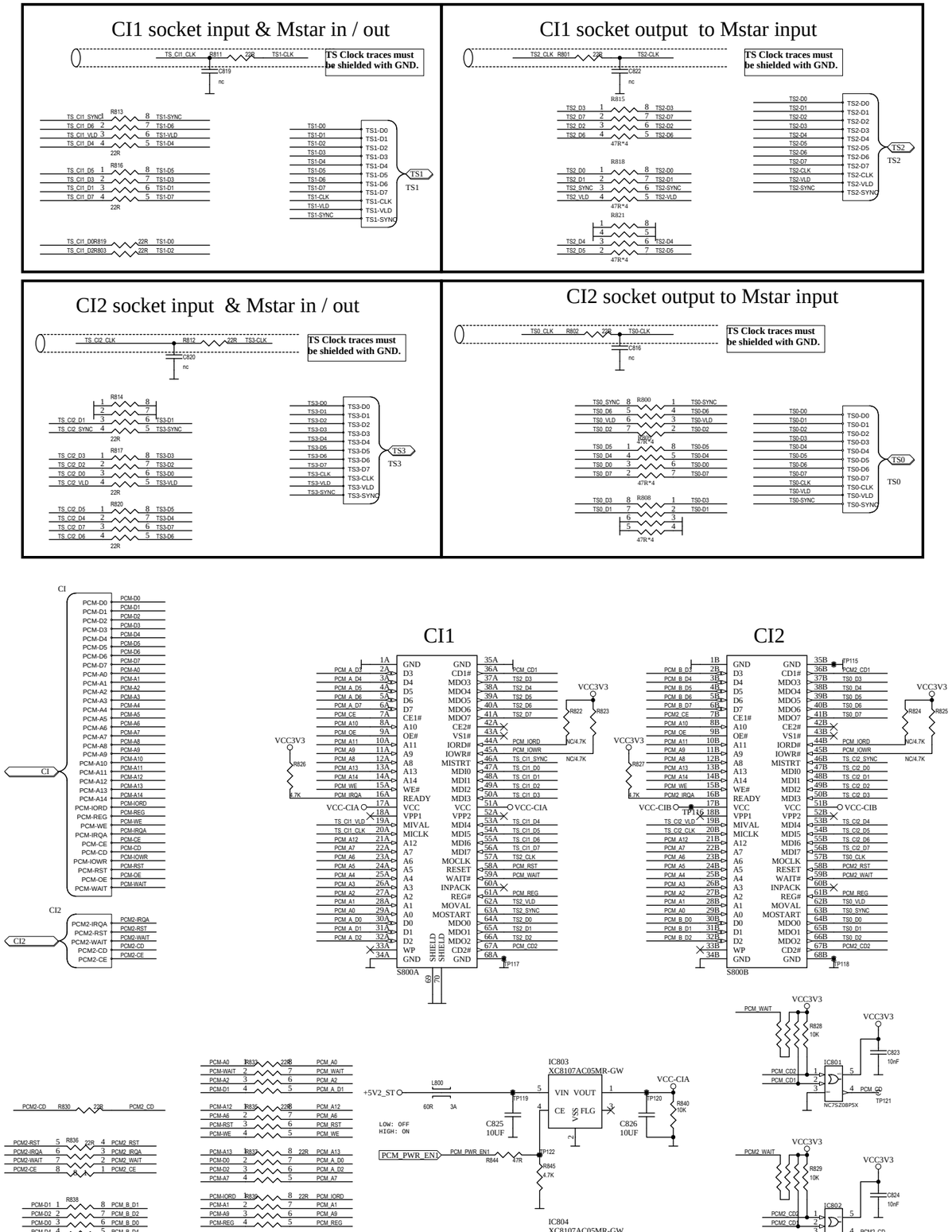

Title: KP PROJECT

Size	Number	Revision
A3	ZMG190R	V-5

http://www.arizanotlari.com

File: \\..\8_TSMUX_CI.SchDoc | Drawn By:

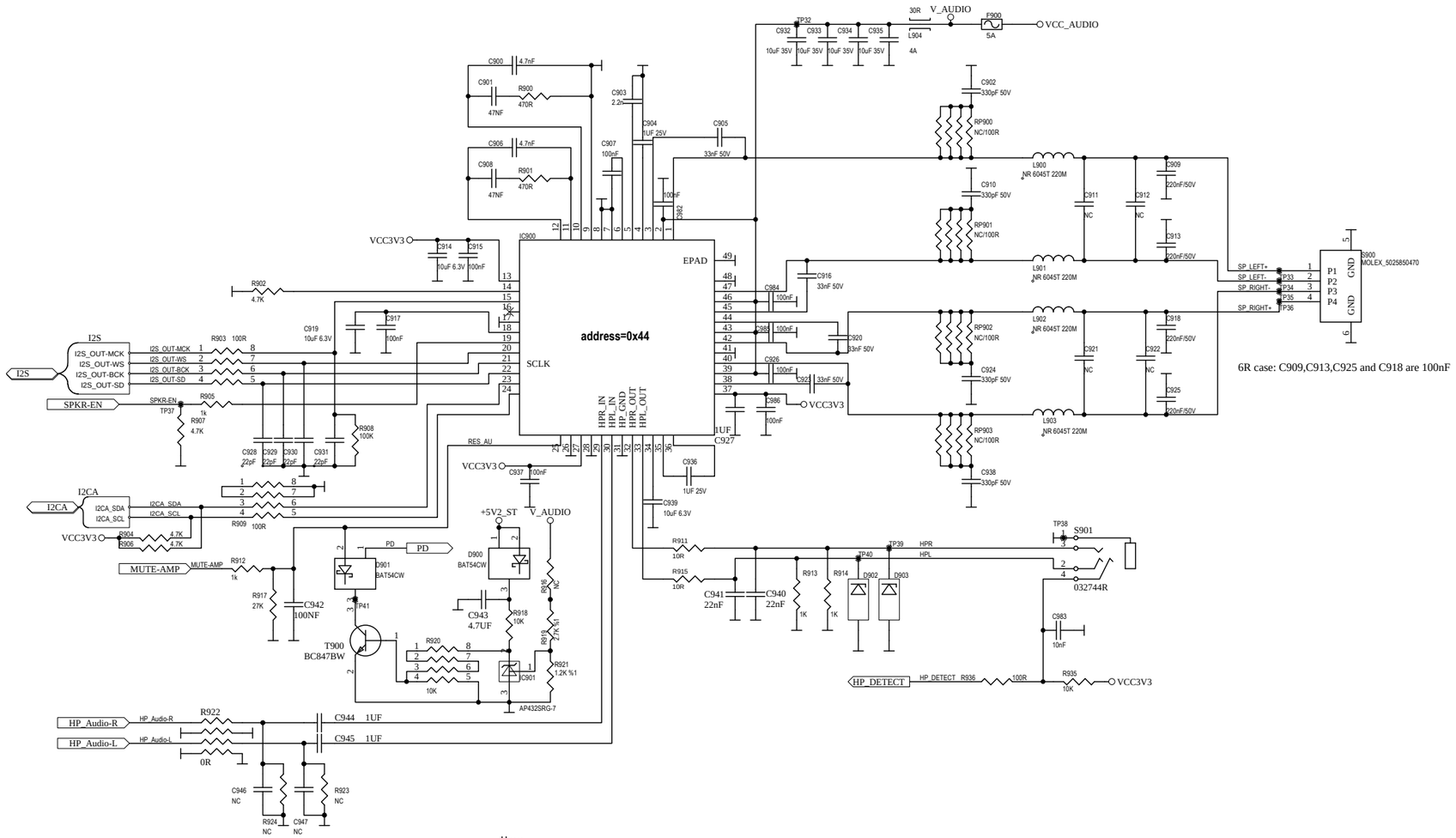

Title		
KP PROJECT		
Size: A2	Number: ZMG190R	Revision: V-5
http://www.arizanotlari.com		
File: \\..\9_AUDIO AMP.SchDoc		Drawn By: